C5-GRADING AND SERVICING PLAN
ARCH D 24" x 36"

Project Management Initials: Drawn By: AL

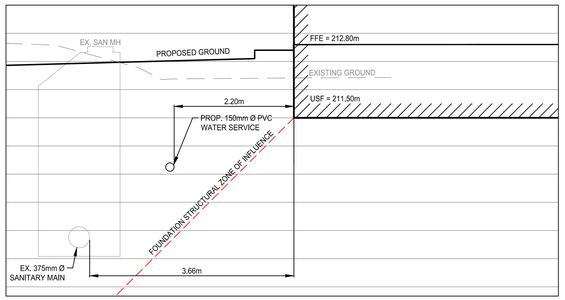

SECTION A - SEPARATION OF SANITARY FROM PROPOSED FIRE STATION

SCALE: 1:50

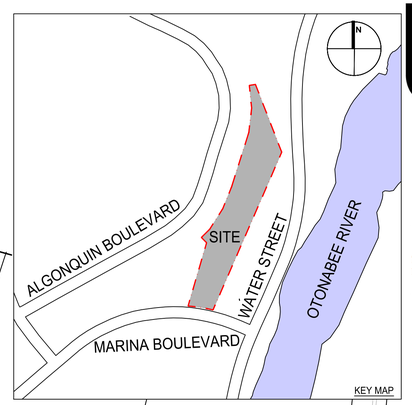

KEY MAP

750mm Ø CPP WATERMAIN

600mm Ø CAST IRON TRUNK WATERMAIN

DEVELOPMENT BOUNDARY

ESTIMATED BEDROCK ELEVATION = 210.00. BLASTING MAY BE REQUIRED TO INSTALL WATER STORAGE TANK. CONTRACTOR TO INVESTIGATE DEPTH OF BEDROCK IN LOCATION OF TANK AT EARLIEST CONVENIENCE.

0.3m DEPTH FLAT-BOTTOM CONVEYANCE SWALE AS PER DETAIL 4 ON SHEET 6

ESTIMATED BEDROCK ELEVATION = 210.30. BLASTING MAY BE REQUIRED TO INSTALL SANITARY AND WATER SERVICE. CONTRACTOR TO INVESTIGATE DEPTH OF BEDROCK IN SERVICE LOCATIONS AT EARLIEST CONVENIENCE.

PROP. 150mm Ø WATER SERVICE MAINTAIN 1.8m COVER ON SERVICE

CONCRETE BARRIER CURB AS PER OPSD 610.110 (TYP.)

PROP. 200mm Ø PERFORATED HDPE SUBDRAIN @ 0.50%

PROPOSED 0.15m HIGH ROCK SPILLWAY INTO BIORETENTION, SEE DETAIL 13 ON SHEET 6

PROP. 150mm Ø WATER SERVICE MAINTAIN 1.8m COVER ON SERVICE

CONNECT TO EXISTING WATERMAIN AT THE EXISTING 150mm Ø GATE VALVE

ADJUST EXISTING MANHOLE TO LOWER TOP OF GRATE FROM 212.76 TO 212.46

PROVIDE 0.5m SHOULDER @ 2.0% PRIOR TO 3:1 SLOPE

CONCRETE BARRIER CURB AS PER OPSD 610.110 (TYP.)

0.3m DEPTH CONVEYANCE SWALE AS PER DETAIL 3 ON SHEET 6

HEAVY DUTY ASPHALT AS PER DETAIL 1 ON SHEET 6

DROPPED CURB AS PER OPSD 610.110 (TYP.)

MATCH EXISTING SIDEWALK ELEVATION, CONCRETE SIDEWALK AS PER CPD 351.01

PR SAN MH T/G=212.55 INV=209.33-S INV=209.36-N INV=209.46-E

CROSSING DATA WAT INV = 210.65 SAN OBV = 209.73

SAN MH T/G=212.76 INV=209.23-N INV=209.19-W

SOBDRAIN TO OUTLET INTO BIORETENTION STONE MEDIA INV. = 210.68

EXISTING SWALE

STM MH T/G=212.17 INV=211.15-SE INV=210.64-NW INV=210.48-NE

PROP. HYDRANT AND VALVE CONNECTION, REFER TO PUC DETAIL A1633 ON SHEET 6

RESTORE AREA WITH 150mm TOPSOIL AND SOD

150mm Ø VENT PIPE

PROP. WATER SERVICE INV. @ BUILDING: 210.80

PROP. 5.0m - 200mm Ø PVC SAN @ 2.0%

PROP. SANITARY SERVICE INV. @ BUILDING: 209.56

DROPPED CURB AS PER OPSD 610.110 (TYP.)

PROP. STORM INV. @ BUILDING: 211.60

125mm DEPTH CONCRETE AS PER CPD 351.01

PR STM MH T/G=212.53 INV=211.52-SW INV=211.50-NE

PROP. DRY HYDRANT AND WATER STORAGE SYSTEM AS PER DETAILS 9 AND 10 ON SHEET 6

600mm x 600mm CONCRETE TRAFFIC BARRIER, SEE DETAILS 9 AND 10 ON SHEET 6

BIORETENTION OVERFLOW SPILLWAY AS PER DETAIL 6 ON SHEET 6

CURB RETURN AT ENTRANCE AS PER CPD M1.2

TAPER CURB TO GRADE WITHIN 300mm OF SIDEWALK

DROP CURB ACROSS ENTRANCE AS PER CPD M1.2

200mm DEPTH CONCRETE SIDEWALK AS PER CPD 351.01

NOTE: ALL RESTORATION DETAILS WITHIN THE RIGHT OF WAY TO BE CONSTRUCTED AS PER CITY OF PETERBOROUGH ENGINEERING DESIGN GUIDELINES

STRUCTURAL CONCRETE APRON TO BE SLOPED AT 2.0% AWAY FROM THE BUILDING FOR THE FIRST 2.0m REFER TO STRUCTURAL DRAWINGS FOR 2.0m CONCRETE APRON DESIGN DETAILS

PROP 51.8m-300mm Ø PVC STM @ 0.5%

PROP 16.7m-300mm Ø PVC STM @ 0.5%

PROVIDE 50mm HI-40 STYROFOAM PIPE INSULATION AS PER DETAIL 11 ON SHEET 6

OUTLET INV: 211.25

200mm DEPTH 100mm Ø RIP-RAP SURROUNDING STORM OUTLET AS PER OPSD 810.010

TAPER CURB TO GRADE WITHIN 300mm OF SIDEWALK

125mm DEPTH CONCRETE SIDEWALK AS PER CPD 351.01

CONCRETE BARRIER CURB AS PER OPSD 610.110 (TYP.)

DROPPED CURB AS PER OPSD 610.110 (TYP.)

CONCRETE PAVEMENT AS PER DETAIL 12 ON SHEET 6

PROPOSED CITY OF PETERBOROUGH FIRE STATION #2 FFE = 212.80m

CONCRETE PAVEMENT AS PER DETAIL 12 ON SHEET 6

DROPPED CURB AS PER OPSD 610.110 (TYP.)

SNOW STORAGE AREA

PROVIDE ASPHALT TRANSITION TREATMENT AS PER DETAIL 5 ON SHEET 6

FULL DEPTH ASPHALT REINSTATEMENT

PARTIAL DEPTH ASPHALT REINSTATEMENT

CURB RETURN AT ENTRANCE AS PER CPD M1.2

125mm DEPTH CONCRETE SIDEWALK AS PER CPD 351.01

TACTILE WALKING SURFACE INDICATOR AS PER OPSD 310.039

DROPPED CURB ACROSS BARRIER FREE PARKING AS PER OPSD 610.110 (TYP.)

PRECAST CONCRETE CURB AS PER OPSD 603.020 (TYP.)

MAINTAIN MINIMUM 1.67m x 1.67m LEVEL AREA AT ACCESSIBLE ENTRANCE

TACTILE WALKING SURFACE INDICATOR AS PER OPSD 310.039

CONCRETE BARRIER CURB AS PER OPSD 610.110 (TYP.)

125mm DEPTH CONCRETE AS PER CPD 351.01

LIMIT OF GRADING

MEDIUM DUTY ASPHALT AS PER DETAIL 2 ON SHEET 6

HEAVY DUTY ASPHALT AS PER DETAIL 1 ON SHEET 6

PROPOSED GRAVEL PAVEMENT STRUCTURE AS PER DETAIL 8 ON SHEET 6

LIMIT OF GRADING

EX. WOODLAND DRIP LINE

REFER TO LANDSCAPE FOR PROPOSED TREATMENT

MATCH EXISTING SIDEWALK ELEVATION, CONCRETE SIDEWALK AS PER CPD 351.01

REFER TO LANDSCAPE FOR PROPOSED TREATMENT

MARINA BOULEVARD

DEVELOPMENT BOUNDARY

PROPOSED SC-150 EROSION CONTROL BLANKET OVER SLOPES GREATER THAN 3:1

PROVIDE 0.5m SHOULDER AT 2.0% BEHIND CURB

1 GRADING AND SERVICING PLAN

C5 REF: Scale: 1 : 250

Last Plotted: 2022-09-21 2:37:33 PM
Filename: S:\01 - Projects\21000\21015- CoP Fire Station#2\02 Design\01 - Drawings\01 - Current Drawings\21015 - GPSS.dwg

lett Architects Inc.
138 Simcoe Street
Peterborough Ontario K9H 2H5
t. 705.743.3311
e. studio@lett.ca

Consultant:
ENGAGE ENGINEERING
www.engageeng.ca ■ 171 King Street, Suite 120, Peterborough, ON ■ Phone: (705) 750-0427

ISSUE / REVISIONS

1	Issued for Site Plan Application	Jan.28.22
2	Issued for Building Permit Response	Apr.25.22
3	Re-Issued for Site Plan Application	June.16.22
4	Issued for Tender	July.07.22
5	Re-Issued for Site Plan Application	July.14.22
6	Issued for Addendum 2	Sept.14.22
7	Issued for Addendum 3	Sept.22.22

NOT FOR CONSTRUCTION

LICENSED PROFESSIONAL ENGINEER
L.T.PARSONS
100516860
2022-09-22
PROVINCE OF ONTARIO

All dimensions to be checked and verified on site. Do not scale drawings. Any discrepancies are to be reported to the Consultant. All drawings remain the property of the Consultant. Only latest approved drawings to be used for construction.

CONSTRUCTION DOCUMENTATION

PROJECT No. 21-100
START DATE OCT.27.2021

CITY OF PETERBOROUGH

FIRE STATION NO. 2

(Municipal File No. SPC 1009)
100 Marina Boulevard, Peterborough ON

GRADING AND SERVICING PLAN

C5

C6-DETAILS
ARCH D 24" x 36"

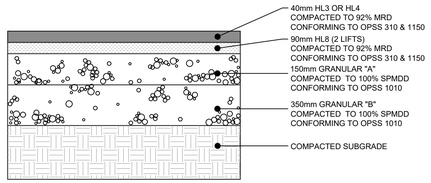

NOTES:
1. ALL DIMENSIONS ARE IN MILLIMETERS UNLESS OTHERWISE NOTED.

1 HEAVY DUTY PAVEMENT STRUCTURE
SCALE: N.T.S.

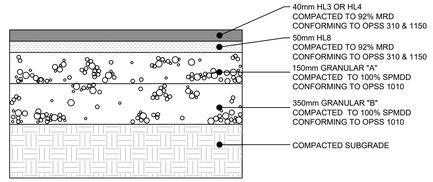

NOTES:
1. ALL DIMENSIONS ARE IN MILLIMETERS UNLESS OTHERWISE NOTED.

2 MEDIUM DUTY PAVEMENT STRUCTURE
SCALE: N.T.S.

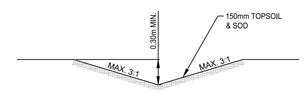

3 V-SHAPED CONVEYANCE SWALE
SCALE: N.T.S.

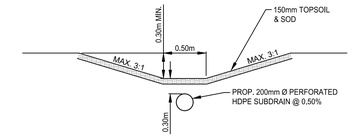

4 FLAT-BOTTOM CONVEYANCE SWALE
SCALE: N.T.S.

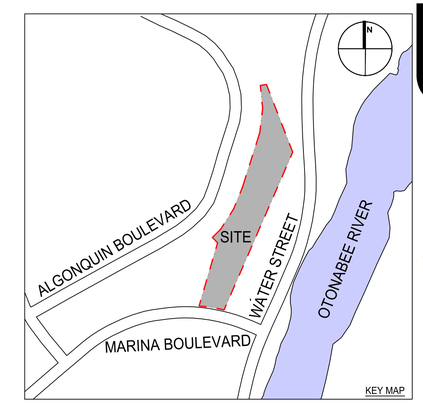

lett
Architects Inc.
138 Simcoe Street
Peterborough Ontario K9H 2H5
t. 705.743.3311
e. studio@lett.ca

Consultant:
ENGAGE ENGINEERING
www.engageeng.ca ■ 171 King Street, Suite 120, Peterborough, ON ■ Phone: (705) 748-0427

ISSUE / REVISIONS		
1	Issued for Site Plan Application	Jan.28.22
2	Issued for Building Permit Response	Apr.25.22
3	Re-Issued for Site Plan Application	June.16.22
4	Issued for Tender	July.07.22
5	Re-Issued for Site Plan Application	July.14.22
6	Issued for Addendum 2	Sept.14.22
7	Issued for Addendum 3	Sept.22.22

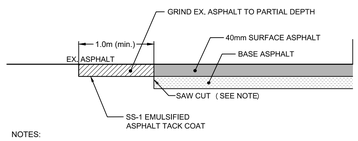

NOTES:

1. TRANSITION TREATMENT REQUIRED AT ALL BUTT JOINTS. THE EXISTING PAVEMENT EDGES SHALL BE "SAW CUT" TO FORM A STRAIGHT, CLEAN VERTICAL FACE.
2. APPLY UNIFORM COATING OF SS-1 EMULSIFIED TACK COAT TO EXISTING ASPHALT EXISTING ASPHALT AT THE TRANSITION TREATMENT AREA.

5 ASPHALT TRANSITION TREATMENT
SCALE: N.T.S.

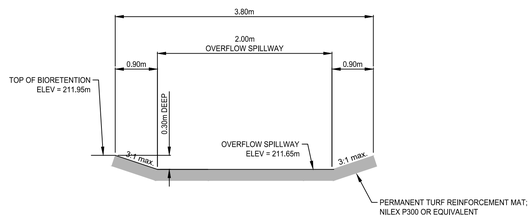

6 BIORETENTION OVERFLOW SPILLWAY
SCALE: N.T.S.

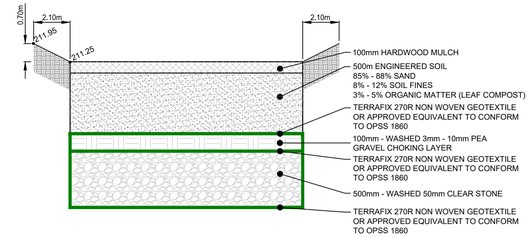

NOTES:
1. ALL DIMENSIONS ARE IN MILLIMETERS UNLESS OTHERWISE NOTED.
2. REFER TO CREDIT VALLEY CONSERVATION(CVC) LOW IMPACT DEVELOPMENT STORMWATER PLANNING AND DESIGN GUIDE 'TABLE 4.5.5 - BIORETENTION SPECIFICATIONS' FOR ADDITIONAL DETAILS.

7 BIORETENTION SOIL STRUCTURE SPECIFICATIONS
SCALE: N.T.S.

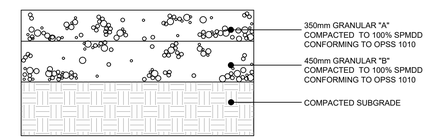

NOTES:
1. ALL DIMENSIONS ARE IN MILLIMETERS UNLESS OTHERWISE NOTED.

8 HEAVY DUTY GRAVEL PAVEMENT STRUCTURE
SCALE: N.T.S.

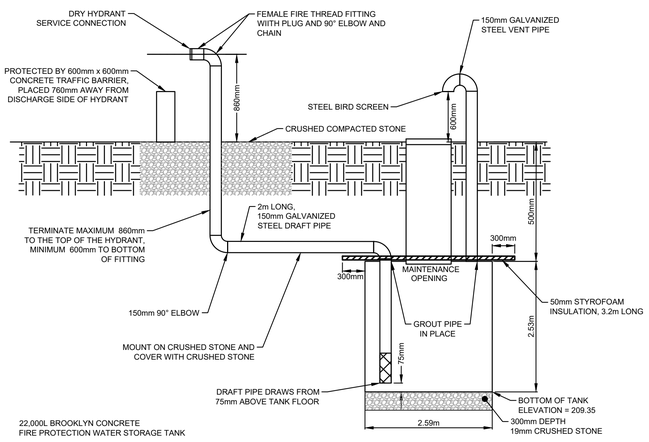

NOTES:
1. MINIMUM 150mm PIPE, SCHEDULE 40 TO BE USED THROUGHOUT, NON-METAL ABOVE GRADE
2. TERMINATE MAXIMUM 860mm TO THE TOP OF THE HYDRANT, MINIMUM 600mm TO BOTTOM OF FITTING (SEE NOTE 4 BELOW)
3. PROTECTED BY A CEMENT TRAFFIC BARRIER, 600mm x 600mm AND OF SUFFICIENT LENGTH TO PROVIDE ADEQUATE PROTECTION FROM VEHICULAR TRAFFIC TO THE HYDRANT, PLACED 760mm AWAY FROM THE DISCHARGE SIDE OF THE DRY HYDRANT, (BETWEEN THE HYDRANT AND WHERE THE TRUCK WOULD PARK (OR EQUIVALENT IF APPROVED BY THE FIRE DEPARTMENT
4. TERMINATE WITH A 150mm FEMALE FIRE THREAD FITTING WITH PLUG
5. TERMINATE DRY HYDRANT PERPENDICULAR TO THE ACCESS ROAD
6. TERMINATE DRY HYDRANT MAXIMUM 2.40m FROM EDGE OF ACCESS ROAD

9 DRY HYDRANT AND TANK - SECTION VIEW
SCALE: N.T.S.

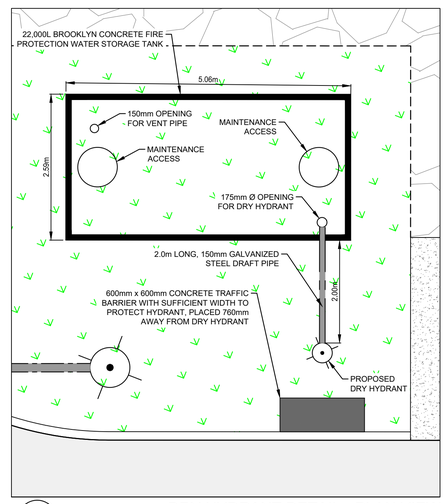

10 DRY HYDRANT DETAIL - PLAN VIEW
SCALE: 1:50

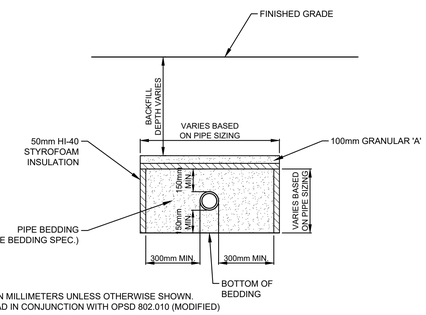

NOTES:
1. ALL DIMENSIONS ARE IN MILLIMETERS UNLESS OTHERWISE SHOWN.
2. THIS DETAIL TO BE READ IN CONJUNCTION WITH OPSD 802.010 (MODIFIED)

11 PIPE INSULATION DETAIL
SCALE: N.T.S.

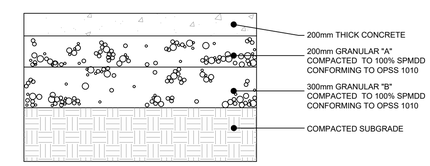

NOTES:
1. ALL DIMENSIONS ARE IN MILLIMETERS UNLESS OTHERWISE NOTED.

12 CONCRETE PAVEMENT STRUCTURE
SCALE: N.T.S.

NOT FOR CONSTRUCTION

LICENSED PROFESSIONAL ENGINEER
L.T.PARSONS
100516860
2022-09-22
PROVINCE OF ONTARIO

All dimensions to be checked and verified on site. Do not scale drawings. Any discrepancies are to be reported to the Consultant. All drawings remain the property of the Consultant. Only latest approved drawings to be used for construction.

CONSTRUCTION DOCUMENTATION

PROJECT No. 21-100
START DATE OCT.27.2021

CITY OF PETERBOROUGH

FIRE STATION NO. 2

(Municipal File No. SPC 1009)
100 Marina Boulevard, Peterborough ON

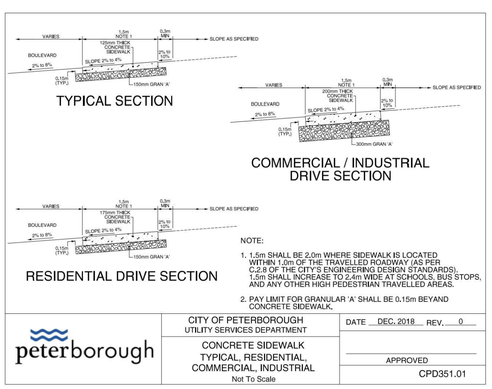

NOTE:
1. 1.5m SHALL BE 2.0m WHERE SIDEWALK IS LOCATED WITHIN 1.0m OF THE TRAVELLED ROADWAY (AS PER C.2.8 OF THE CITY'S ENGINEERING DESIGN STANDARDS). 1.5m SHALL INCREASE TO 2.4m WIDE AT SCHOOLS, BUS STOPS, AND ANY OTHER HIGH PEDESTRIAN TRAVELLED AREAS.
2. PAY LIMIT FOR GRANULAR 'A' SHALL BE 0.15m BEYAND CONCRETE SIDEWALK.

peterborough	CITY OF PETERBOROUGH UTILITY SERVICES DEPARTMENT	DATE DEC. 2018 REV. 0
	CONCRETE SIDEWALK TYPICAL, RESIDENTIAL, COMMERCIAL, INDUSTRIAL Not To Scale	APPROVED CPD351.01

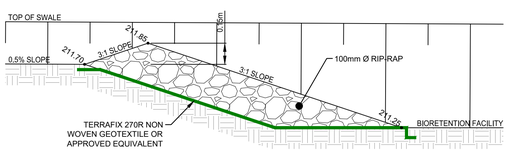

13 0.15m HEIGHT RIP-RAP SPILLWAY INTO BIORETENTION
SCALE: N.T.S.

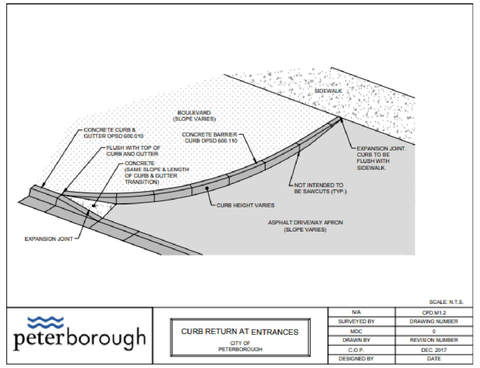

peterborough	CURB RETURN AT ENTRANCES CITY OF PETERBOROUGH	N/A	CPD M1.2
		SURVEYED BY	DRAWING NUMBER
		MDC	-
		DRAWN BY	REVISION NUMBER
		C.O.P.	DEC. 2017
		DESIGNED BY	DATE

SCALE: N.T.S.

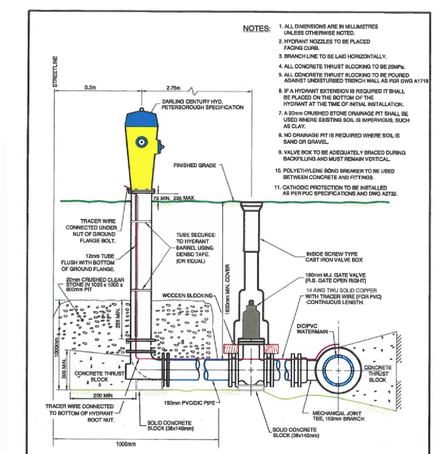

1	DETAILS
C6	REF: Scale: N.T.S.

DETAILS

C6

Project Management Initials: Drawn By: AL

Last Plotted: 2022-09-21 2:39:04 PM
Filename: S:\01 - Projects\21000\21015- CoP Fire Station#2\02 Design\01 - Drawings\01 - Current Drawings\21015 - GPSS.dwg

ARCH D 24" x 36"

Project Management Initials: Drawn By: K.K.M.

NOTES

GENERAL NOTES:

1. CONTRACTOR SHALL VERIFY ALL DIMENSIONS AND SITE CONDITIONS BEFORE PROCEEDING WITH THE WORK, AND REPORT ANY DISCREPANCIES TO THE LANDSCAPE ARCHITECT BEFORE PROCEEDING. NO ALLOWANCE SHALL BE MADE ON BEHALF OF THE CONTRACTOR FOR FAILURE TO DO SO.

2. CONTRACTOR SHALL BE RESPONSIBLE FOR VERIFYING AND STAKING OUT THE LOCATION OF ALL EXISTING UTILITIES AND SERVICES. CONTRACTOR SHALL GIVE UTILITIES ADVANCE NOTICE PRIOR TO DIGGING.

3. LANDSCAPE ARCHITECT IS NOT RESPONSIBLE FOR ACCURACY OF SURVEY OR ENGINEERING DRAWINGS. REFER TO APPROPRIATE DRAWINGS BEFORE PROCEEDING WITH THE WORK.

4. CONTRACTOR SHALL ESTABLISH ALL PROPERTY BOUNDARIES AND CORNER STAKES, AND SHALL BE RESPONSIBLE FOR ALL COSTS OF RE-ESTABLISHING THEM SHOULD THEY BE DISTURBED.

5. CONTRACTOR SHALL NOTIFY LANDSCAPE ARCHITECT MINIMUM 48 HOURS PRIOR TO COMMENCEMENT OF WORK TO COORDINATE INSPECTION SCHEDULES.

6. CONTRACTOR TO CONFIRM PHYSICAL LAYOUT OF ALL LANDSCAPE AND PLANTINGS WITH LANDSCAPE ARCHITECT BEFORE PROCEEDING.

7. CONSTRUCTION MUST CONFORM TO ALL APPLICABLE CODES AND REGULATIONS OF ALL AUTHORITIES HAVING JURISDICTION.

8. REFUELING, LUBRICATION AND/OR MAINTENANCE OF CONSTRUCTION VEHICLES IS NOT PERMITTED ON SITE UNLESS APPROVED BY THE OWNER IN WRITING.

9. CONTRACTOR SHALL BE RESPONSIBLE FOR ANY DAMAGE TO EXISTING STREETS, SIDEWALKS, STRUCTURES, AND MATURE TREES TO REMAIN DURING CONSTRUCTION OF THIS PROJECT AND SHALL REPAIR SUCH DAMAGE AND CLEAN UP CONSTRUCTION DEBRIS TO THE SATISFACTION OF THE OWNER AND THE MUNICIPALITY AT NO ADDITIONAL COST.

10. THE CONTRACTOR, UPON ACCEPTANCE OF THE CONTRACT, ASSUMES COMPLETE RESPONSIBILITY AND LIABILITY FOR THE JOB SITE DURING THE COURSE OF CONSTRUCTION, AND WILL ENSURE PUBLIC SAFETY AND CLEANLINESS OF MUNICIPAL ROADS NEAR THE SITE.

11. ALL DRAWINGS, SPECIFICATIONS AND RELATED DOCUMENTS ARE THE COPYRIGHT OF THE LANDSCAPE ARCHITECT AND MUST BE RETURNED UPON REQUEST. REPRODUCTION OF DRAWINGS, SPECIFICATIONS AND RELATED DOCUMENTS IN WHOLE OR IN PART IS FORBIDDEN WITHOUT THE LANDSCAPE ARCHITECT'S PERMISSION. DRAWINGS ARE NOT TO BE SCALED.

APPLICATION OF TOPSOIL:

1. EXISTING TOPSOIL IS TO BE STOCKPILED IN LOCATION APPROVED BY OWNER. SCREEN ROCKS AND DEBRIS PRIOR TO USE.

2. EXISTING TOPSOIL IS TO BE STOCKPILED AND USED AS APPROPRIATE FOR PROPOSED WORK. IMPORT TOPSOIL AS REQUIRED.

3. CONTRACTOR IS TO PROVIDE NUTRIENT ANALYSIS AND GRAIN SIZE ANALYSIS FOR ALL NEW OR EXISTING TOPSOIL TO BE USED ON SITE AND TO OBTAIN APPROVAL OF LANDSCAPE ARCHITECT PRIOR TO APPLICATION.

4. SCARIFY EXISITING SUBGRADE AND APPLY A MINIMUM OF 300mm OF TOPSOIL OVER DISTURBED AREA.

5. REMOVE DEBRIS, ROOTS, BRANCHES, STONES IN EXCESS OF 50mm DIA. AND OTHER DELETERIOUS MATERIALS.

6. SPREAD TOPSOIL IN UNIFORM AREA, EACH LAYER NOT EXCEEDING 150mm

7. ALL DISTURBED LAWN AREAS ARE TO BE SEEDED OR SODDED.

SODDING:

1. OBTAIN APPROVAL OF FINISHED GRADE PRIOR TO INSTALLATION OF SOD.

2. SUPPLY AND PLACE SCREENED TOPSOIL COMPACTED DEPTH @ 85% S.P.D. OVER SUBGRADE WHICH HAS BEEN SCARIFIED TO 150mm DEPTH PRIOR TO PLACEMENT OF TOPSOIL.

3. SUPPLY AND PLACE NO.1 TURFGRASS NURSERY SOD, SOD THAT HAS BEEN ESPECIALLY SOWN AND CULTIVATED IN NURSERY FIELDS AS TURFGRASS CROP.

4. FINE GRADE TOPSOIL SURFACE FREE OF HUMPS AND HOLLOWS TO SMOOTH, EVEN GRADE, TO TOLERANCE OF +/- 15MM FOR TURFGRASS NURSERY SOD, SURFACE TO DRAIN POSITIVELY.

5. LAY SOD WITHIN 24 HOURS OF BEING LIFTED IF AIR TEMPERATURE EXCEEDS 20 DEGREES CELSIUS.

6. LAY SOD IN ROWS, JOINTS STAGGERED. BUTT SECTIONS CLOSELY WITHOUT OVERLAPPING OR LEAVING GAPS BETWEEN SECTIONS. CUT OUT IRREGULAR, DISCOLOURED OR THIN SECTIONS WITH SHARP IMPLEMENTS.

7. LAY SOD PERPENDICULAR TO DIRECTION OF SLOPE.

8. STAKE SOD ON ALL SLOPES GREATER THAN 3:1. PROVIDE WOOD STAKES, MIN. 2 PER SQ.M. OF SOD, 50mm X 50mm X 200mm, DRIVEN INTO GROUND TO LEVEL OF TOP OF SOD.

9. ROLL SOD AFTER INSTALLATION, TO THE SATISFACTION OF THE LANDSCAPE ARCHITECT. PROVIDE CLOSE CONTACT BETWEEN SOD AND SOIL BY LIGHT ROLLING. USE OF HEAVY ROLLER TO CORRECT IRREGULARITIES IN GRADE IS NOT PERMITTED.

10. PERFORM THE FOLLOWING OPERATIONS FROM TIME OF INSTALLATION UNTIL ACCEPTANCE .

a. WATER SODDED AREAS IN SUFFICIENT QUANTITIES AND AT FREQUENCY REQUIRED TO MAINTAIN OPTIMUM SOIL MOISTURE CONDITION TO DEPTH OF 75 - 100MM, CONTINUOUS, OVER ENTIRE SODDED AREA.

b. THE SOD MUST BE CUT A MINIMUM OF TWO TIMES PRIOR TO ACCEPTANCE. CUT GRASS TO 50MM WHEN OR PRIOR TO, REACHING HEIGHT OF 75MM. EVENLY SPREAD CLIPPINGS BUT REMOVE ANY CLIPPINGS WHICH WILL SMOTHER GRASS.

c. MAINTAIN SODDED AREAS 95% WEED FREE.

11. AFTER ACCEPTANCE OF SODDED AREAS, MAINTENANCE INCLUDING WATERING BECOMES THE RESPONSIBILITY OF THE OWNER.

12. CLEAN THOROUGHLY TO THE SATISFACTION OF THE LANDSCAPE ARCHITECT, AND REMOVE ALL EXCESS MATERIALS FROM THE SITE.

SEEDING:

1. SEED WITH SEED MIX AS NOTED IN PLANT LIST AND ON L1 ADDENDUM #3

2. OBTAIN APPROVAL OF FINISHED GRADE PRIOR TO APPLICATION OF SEED.

3. APPLY SEED BETWEEN AUGUST 15 AND OCTOBER 15, OR WITHIN THE FIRST 3 WEEKS OF MAY, WEATHER PERMITTING. REFER TO MANUFACTURER'S SPECIFICATIONS FOR APPLICATION.

4. WATER SEEDED AREAS AS REQUIRED TO ENSURE GERMINATION AND CONTINUOUS GROWTH.

5. AREAS WILL BE ACCEPTED PROVIDED THAT SEEDED AREAS ARE UNIFORMLY ESTABLISHED AND FREE OF RUTTED, ERODED, BARE, OR DEAD SPOTS.

6. CONTRACTOR TO FOLLOW OPSS 572: CONSTRUCTION SPECIFICATION FOR SEED AND COVER CROP

7. ALL SEED TO BE HYDROSEEDED **PRIOR** TO PLANTING SHRUBS AND TREES

8. COVER CROP: REFER TO COVER CROP IN PLANT LIST ON L1

PLANT LIST

Sym	Qty	Botanical Name	Common Name	Size	Condition	Spacing	Comments
Deciduous Trees							
RPM	1	Acer rubrum 'Frank Jr.'	Redpointe Maple	60 mm cal.	WB	as shown	Specimen
SFS	3	Amelanchier laevis 'Spring Flurry'	Spring Flurry Serviceberry	45mm cal.	WB	as shown	Specimen
RPM	1	Acer rubrum 'Frank Jr.'	Redpointe Maple	60 mm cal.	WB	as shown	Specimen
RPO	1	Quercus 'Regal Prince'	Regal Prince English Oak	60 mm cal.	WB	as shown	Specimen
RO	1	Quercus rubra	Red Oak	60 mm cal.	WB	as shown	Specimen
VFE	1	Ulmus americana 'Valley Forge'	Valley Forge Elm	60 mm cal.	WB	as shown	Specimen
Coniferous Trees							
WS	1	Picea glauca	White Spruce	180 cm	WB	as shown	Specimen
WP	1	Pinus strobus	Eastern White Pine	180 cm	WB	as shown	Specimen
Deciduous Shrubs							
AFD	12	Cornus stolonifera 'Farrow'	Arctic Fire Red Twig Dogwood	50 cm	container	as shown	
AC	14	Ribes alpinum	Alpine Currant	50 cm	container	as shown	
TWN	23	Physocarpus opulifolius 'Tiny Wine **Gold**'	Tiny Wine **Gold** Ninebark	50 cm	container	as shown	
Evergreen Shrubs							
SMP	18	Pinus mugo 'Slowmound'	Slowmound Mugo Pine	40 cm	container	as shown	
Ornamental Grasses/Sedges							
CSS	14	Panicum virgatum 'Cheyenne Sky'	Cheyenne Sky Switch Grass	2 gal.	container	as shown	
NSG	9	Panicum virgatum 'Northwind'	Northwind Switch Grass	2 gal.	container	as shown	
Perennials							
SDD	18	Hemerocallis Stella D'Oro	Stella D'Oro Daylily	1 gal	container	as shown	
SCR	55	Echinacea 'Sombrero Salsa Red'	Salsa Red Sombrero Coneflower	1 gal	container	as shown	
Seed Mixes							
Seed Mix	Cover Crop: OSC Seasonally Flooded Mix 8240		Seed at supplier's recommended rate		Approximate area 550 sq.m.		
Seed Mix	#1: OSC Seasonally Flooded Mix 8240		Seed at supplier's recommended rate		Approximate area 550 sq.m.		
Seed Mix	#2: OSC Simcoe County Mix 6850		Seed at supplier's recommended rate		Approximate area 850 sq.m.		
Seed Mix	#3: OSC Woodland Native Seed Mix 8275		Seed at supplier's recommended rate		Approximate area 350 sq.m.		

*** ALL SEED MIX SUPPLY AND INSTALLATION INSTRUCTIONS AS PER OSC Seeds**
(519) 886-0557 seeds@oscseeds.com KITCHENER, ONTARIO
*** NO SUBSTITUTIONS UNLESS APPROVED BY LANDSCAPE ARCHITECT PRIOR TO DELIVERY TO SITE**
*** SPACING AS NOTED ON THIS LIST IS APPROXIMATE ONLY - ALL PLANT LAYOUT TO BE AS PER PLAN**

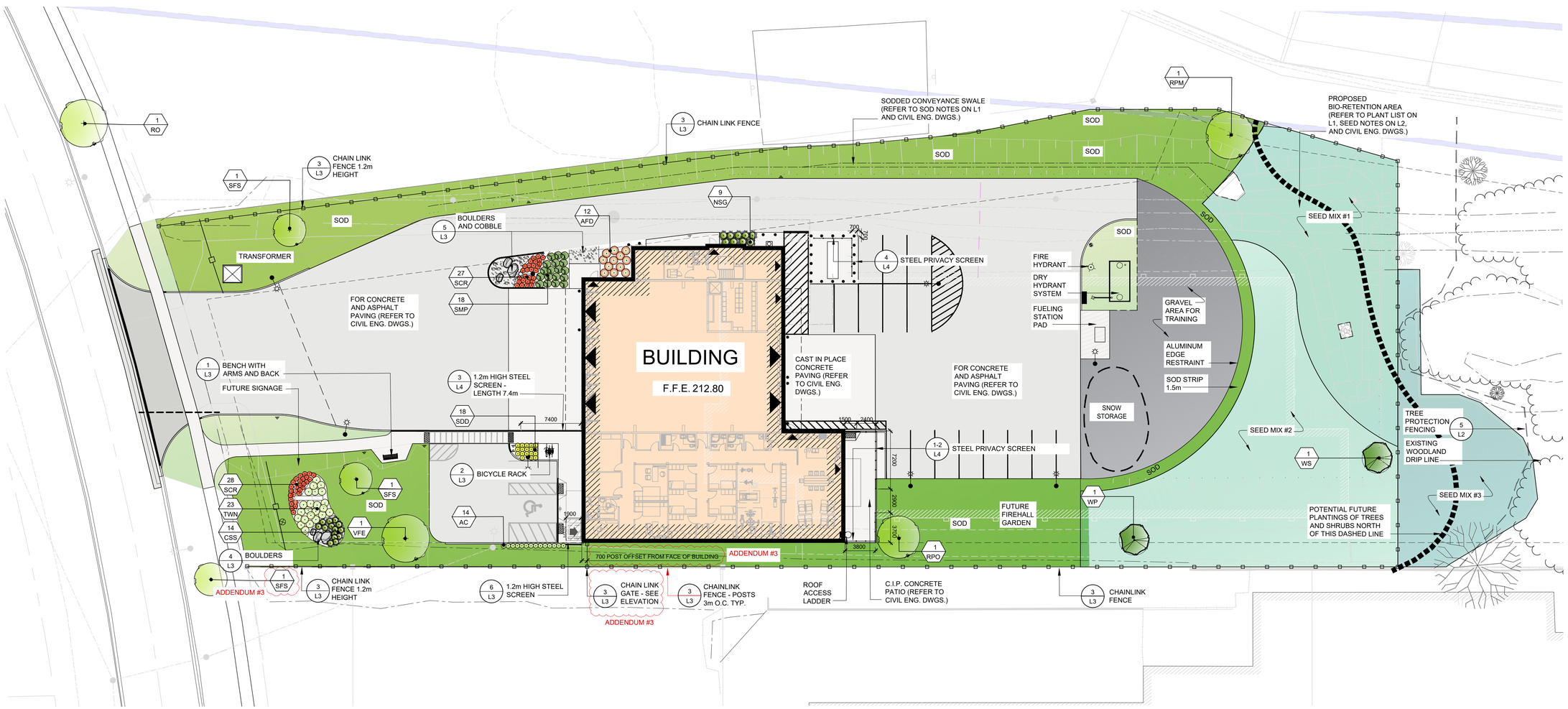

1 / L1 Landscape Plan
1:250

lett Architects Inc.
138 Simcoe Street
Peterborough Ontario K9H 2H5
t. 705.743.3311
e. studio@lett.ca

B&A LANDSCAPE ARCHITECTURE
416 Chambers St., Peterborough, ON K9H 3V1
Tel. 705.745.3623 www.basterfield.ca

ISSUE / REVISIONS

1	Site Plan Application	Feb.3.22
2	Issued for Pricing	Apr.20.22
3	Re-issued for Site Plan Application	Jun.17.22
4	Issued for Tender	July7.22
5	Addendum #2	Sept.13.22
6	Addendum #3	Sept.19.22

NOT FOR CONSTRUCTION

ASSOCIATION OF LANDSCAPE ARCHITECTS ONTARIO
B.G.BASTERFIELD
OALA
MEMBER

All dimensions to be checked and verified on site. Do not scale drawings. Any discrepancies are to be reported to the Consultant. All drawings remain the property of the Consultant. Only latest approved drawings to be used for construction.

CONSTRUCTION DOCUMENTATION

PROJECT No. 21-100
START DATE OCT.27.2021

CITY OF PETERBOROUGH

FIRE STATION NO. 2

(Municipal File No. SPC 1009)
100 Marina Boulevard, Peterborough ON

LANDSCAPE PLAN

L1

ARCH D 24" x 36"

Project Management Initials: Drawn By: K.K.M.

400 SERIES

MBE-0400-00023

Legacy # MLB400-RC

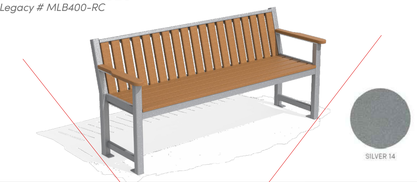

SILVER 14

MATERIALS: Bench frame is made from H.S. steel tube and flat bar. The seat and back employ recycled plastic slats - Cedar Colour

FINISH: All steel components are protected with E-Coat rust proofing. The Maglin Powdercoat System provides a durable finish on all metal surfaces.

INSTALLATION: The bench is delivered pre-assembled. Holes (0.5") are provided in each foot for securing to base.

TO SPECIFY: Select MBE-0400-00023
Choose:
- Powdercoat Color : Silver 14

HEIGHT: 33.5" (85.1cm) LENGTH: 72" (182.7cm) DEPTH: 24.81" (67.3cm) WEIGHT: 158.63lbs (72kg)

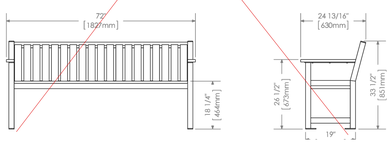

MAGLIN™ Site Furniture

T 800 716 5506
F 877 260 9393
www.maglin.com
sales@maglin.com

- All drawings, specifications, design and details on this page remain the property of Maglin Site Furniture Inc. and may not be used without Maglin authorization.
- Details and specifications may vary due to continuing improvements of our products.

1 L3 **Bench**
N.T.S.

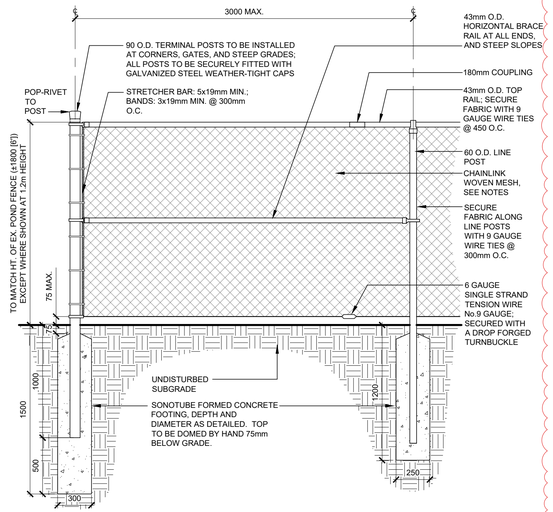

FENCING, TYPICAL

FENCE AND GATE NOTES:

1. CONTRACTOR TO PROVIDE SHOP DRAWINGS FOR APPROVAL
2. ALL DIMENSIONS SHOWN IN MILLIMETRES, UNLESS STATED OTHERWISE.
3. ALL CHAIN LINK FABRIC TO BE WOVEN 50mm MESH, 1800 - No.9 GAUGE GALVANIZED STEEL CORE; SECURE TO FRAME, STRETCHER BAR AND BRACE RAIL WITH 9 GAUGE WIRE TIES AT 300mm O.C., KNUCKLED.
4. ALL COMPONENTS TO BE GALVANIZED STEEL - NO PLASTIC FITTINGS OR COMPONENTS TO BE USED
5. BOLT ENDS TO BE AT BACK OF GATE.
6. EACH GATE TO BE COMPLETE WITH WHEELS.
7. ALL JOINTS TO BE WELDED AND GROUND SMOOTH.
8. CONCRETE FOOTINGS TO BE 30 MPa AT 28 DAYS.
9. FOR LINE POST CAP DETAIL REFER TO OPSD 972.132
10. ALL TO BE BLACK VINYL COATED

3 L3 **Chain Link Fence and Gate**
1:25

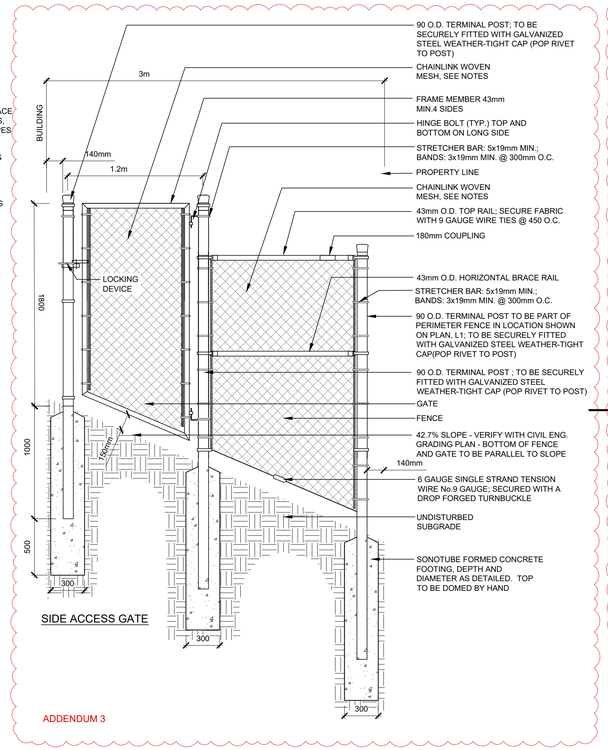

SIDE ACCESS GATE

ADDENDUM 3

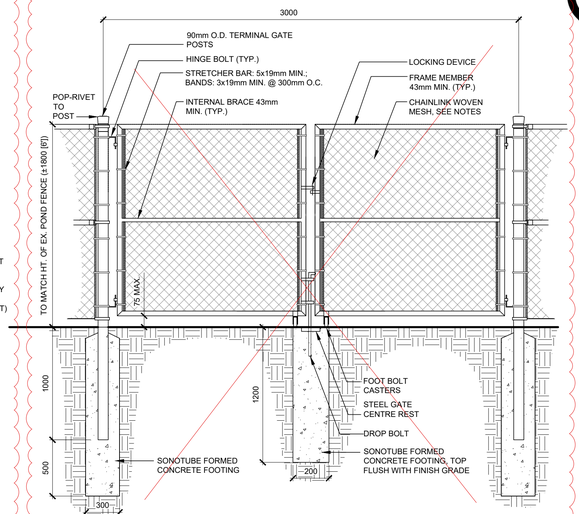

MAINTENANCE GATES, TYPICAL

ADDENDUM 3

300 SERIES

MBR-0350-00001

Legacy # MBR350-4-S

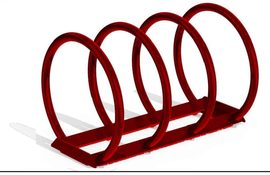

RED
RAL 3002

MATERIALS: Bike Rack is constructed using H.S. steel tube, formed steel and solid steel angle.

FINISH: All steel components are protected with E-Coat rust proofing. The Maglin Powdercoat System provides a durable finish on all metal surfaces.

INSTALLATION: The bike rack is delivered pre-assembled. It is available with a surface mount installation.

TO SPECIFY: Select MBR-0350-00001
Choose:
- Powdercoat Color : Red RAL 3002

HEIGHT: 23.81" (60.48cm) LENGTH: 37.25" (94.62cm) DIAMETER: 24.63" (62.56cm) WEIGHT: 79.4 lbs (36kg)

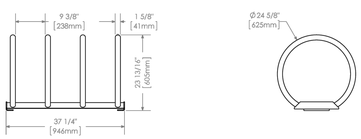

MAGLIN™ Site Furniture

T 800 716 5506
F 877 260 9393
www.maglin.com
sales@maglin.com

- All drawings, specifications, design and details on this page remain the property of Maglin Site Furniture Inc. and may not be used without Maglin authorization.
- Details and specifications may vary due to continuing improvements of our products.

2 L3 **Bicycle Rack**
N.T.S.

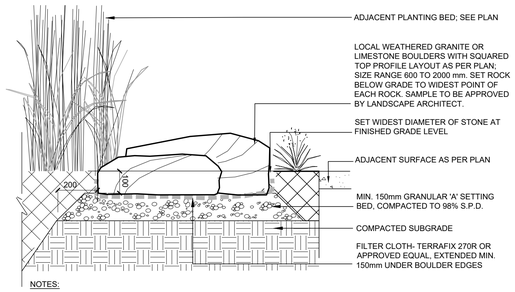

NOTES:

1. ALL BOULDERS TO BE TIGHTLY NESTLED TOGETHER UNLESS SHOWN OTHERWISE ON THE PLAN. STONE SIZE AND ARRANGEMENT TO BE AS PER PLAN.
2. SELECT STONES WITH NO VISIBLE SAW CUTS, DRILL CORES OR LARGE HANDLING SCRAPES.
2. HANDLE ALL ROCKS CAREFULLY AT ALL TIMES ENSURING THAT INSTALLED MATERIAL IS FREE OF EXTRACTION AND HANDLING MARKS.
3. USE HOOKS AND STRAPS (NOT CHAINS) FOR MANEUVERING ROCK INTO PLACE.

4 L3 **Boulders in Planting Bed**
N.T.S.

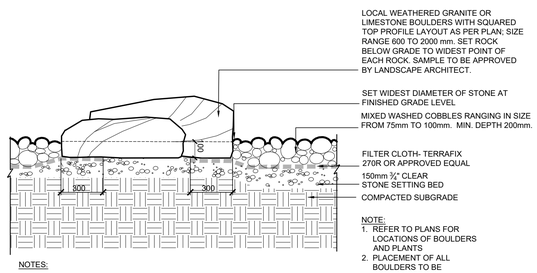

NOTE:
1. REFER TO PLANS FOR LOCATIONS OF BOULDERS AND PLANTS
2. PLACEMENT OF ALL BOULDERS TO BE SUPERVISED BY LANDSCAPE ARCHITECT

NOTES:

1. ALL BOULDERS TO BE TIGHTLY NESTLED TOGETHER UNLESS SHOWN OTHERWISE ON THE PLAN. STONE SIZE AND ARRANGEMENT TO BE AS PER PLAN.
2. SELECT STONES WITH NO VISIBLE SAW CUTS, DRILL CORES OR LARGE HANDLING SCRAPES.
2. HANDLE ALL ROCKS CAREFULLY AT ALL TIMES ENSURING THAT INSTALLED MATERIAL IS FREE OF EXTRACTION AND HANDLING MARKS.
3. USE HOOKS AND STRAPS (NOT CHAINS) FOR MANEUVERING ROCK INTO PLACE.

5 L3 **Boulders and Cobbles**
N.T.S.

ITEM	QTY	MODELNUMBER
MPA-2600-00011	1	FLEXX PANEL, 6' W X 4' H, STEEL, LD1 - MATRIX
MPA-2600-00021	2	FLEXX POST, 4' H, AL EXT, DRILLED 1 SIDE, SM

APPROVED BY:	
DATE:	

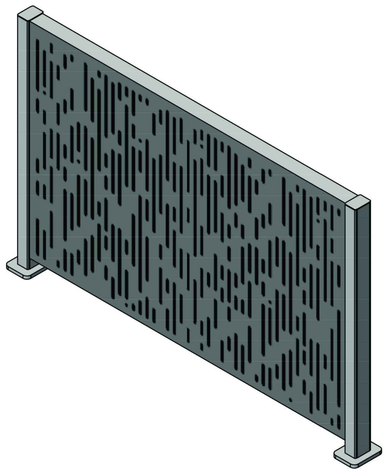

Powdercoat:
'Silver 14'

Perforation Type
to be Approved

* PLEASE NOTE COLORS IN THIS DRAWING DO NOT REFLECT YOUR ORDER

MAGLIN
MAGLIN SITE FURNITURE
WWW.MAGLIN.COM
TEL.: 800-716-5506
FAX: 877-260-9393

THE INFORMATION CONTAINED IN THIS DRAWING IS THE SOLE PROPERTY OF MAGLIN SITE FURNITURE ANY REPRODUCTION IN PART OR AS A WHOLE WITHOUT THE WRITTEN PERMISSION OF MAGLIN SITE FURNITURE IS PROHIBITED.

TITLE: FLEXX LAYOUT, 53652	
LAYOUT #: MPA2600-53652	DATE: 9/13/2022
WEIGHT: 139.81 LBS	SHEET: 1 OF 2

6 L3 **Steel Screen**
N.T.S.

lett Architects Inc.
138 Simcoe Street
Peterborough Ontario K9H 2H5
t. 705.743.3311
e. studio@lett.ca

B&A LANDSCAPE ARCHITECTURE
416 Chambers St., Peterborough, ON K9H 3V1
Tel. 705.745.3623 www.basterfield.ca

ISSUE / REVISIONS

1	Site Plan Application	Feb.3.22
2	Issued for Pricing	Apr.20.22
3	Re-issued for Site Plan Application	Jun.17.22
4	Issued for Tender	July7.22
5	Addendum #2	Sept.13.22
6	Addendum #3	Sept.19.22

NOT FOR CONSTRUCTION

ONTARIO ASSOCIATION OF LANDSCAPE ARCHITECTS
B.D. BASTERFIELD
OALA
MEMBER

All dimensions to be checked and verified on site. Do not scale drawings. Any discrepancies are to be reported to the Consultant. All drawings remain the property of the Consultant. Only latest approved drawings to be used for construction.

CONSTRUCTION DOCUMENTATION

PROJECT No. 21-100
START DATE OCT.27.2021

CITY OF PETERBOROUGH

FIRE STATION NO. 2

(Municipal File No. SPC 1009)
100 Marina Boulevard, Peterborough ON

LANDSCAPE DETAILS

L3

ARCH D 24" x 36"

Project Management Initials: Drawn By: WPL/ACM/HT

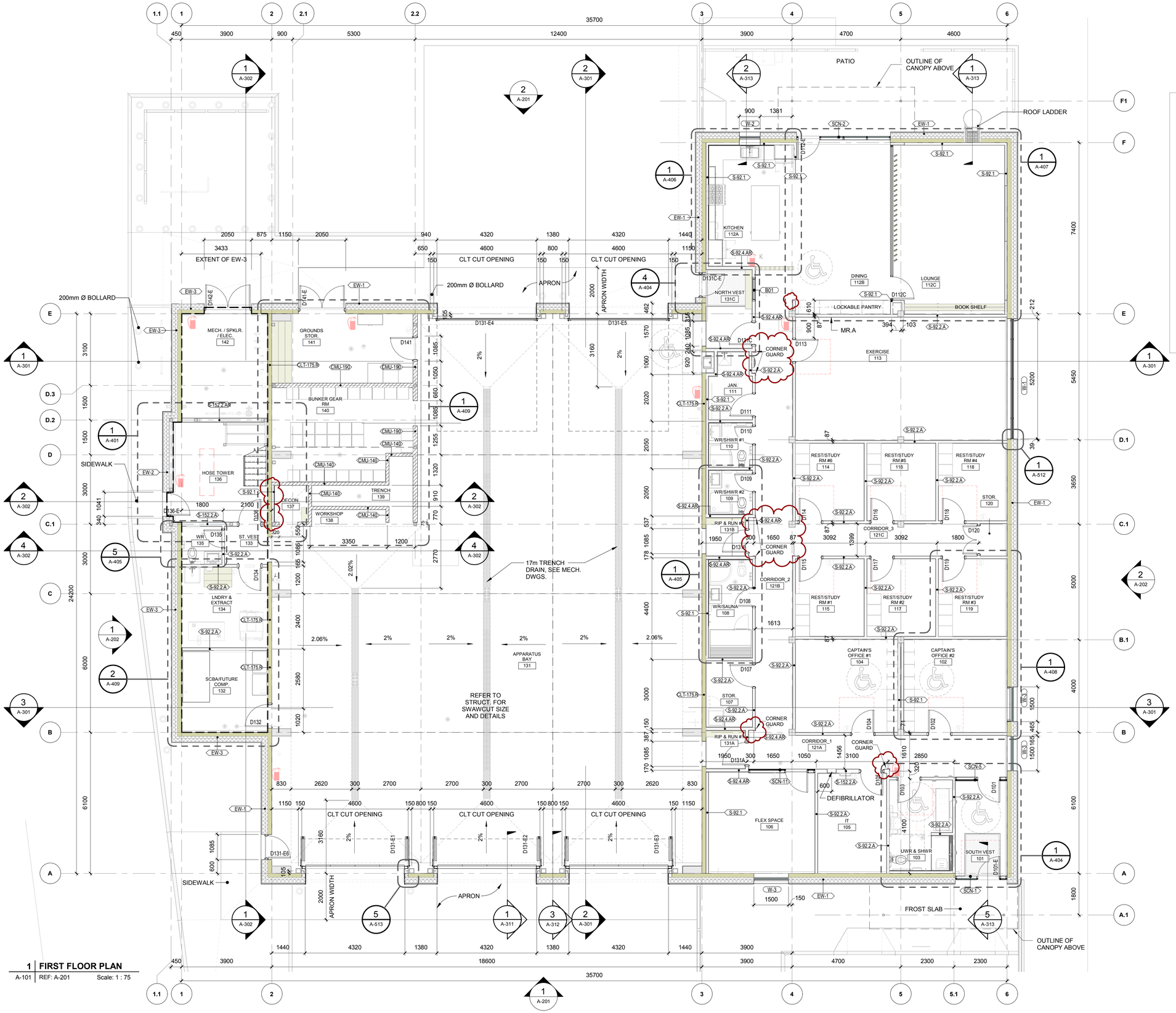

1 | FIRST FLOOR PLAN
A-101 | REF: A-201 | Scale: 1 : 75

Last Plotted: 2022-09-21 1:34:01 PM
Filename: Autodesk Docs://CoP Fire Station 2 (CD)/21-100_LAI-R22_CoP_FS2_BLDG.rvt

GENERAL NOTES

1. ROOF ANCHORS TO BE LOCATED ALONG BEAM LINES AND SPACED SO THAT THE MINUMUM NUMBER OF ANCHORS REQUIRED ARE INCLUDED.

2. ANCHOR LAYOUT FOR FALL RESTRAINT SYSTEM IN THESE DRAWINGS IS FOR DEMONSTRATION AND IS TO BE ADJUSTED TO THE SPECIFIC SYSTEM REQUIREMENTS

3. GC TO ENSURE CLT & MECH. TRADES COORDINATE PENETRATIONS AND FINAL DUCT SIZING/RUNS THROUGH CLT

4. CLT OPENINGS TO BE RATIONALIZED IN PANELS AND COORDINATED WITH OTHER TRADES

5. BULLNOSE CORNERS TO BE ON ALL EXPOSED CONCRETE BLOCK OPENINGS (TYP.)

6. EXTERIOR STEEL COLUMN TO BE GALVANIZED WITH PREMIUM GRADE PAINT FINISH

7. CLT PANELS FACING APPARATUS BAY AND CLT PANELS AT BUILDING PERIMETER FACING INTERIOR SHALL BE ARCHITECTURE FINISH.

ISSUE / REVISIONS

1	Issued for Site Plan Application	Jan.28.22
2	Issued for Building Permit	Mar.21.22
3	Issued for Building Permit Response	Apr.25.22
4	Issued for Tender	Aug.18.22
5	Issued for Addendum 2	Sep.15.22
6	Issued for Addendum 3	Sep.22.22

lett Architects Inc.
138 Simcoe Street
Peterborough Ontario K9H 2H5
t. 705.743.3311
e. studio@lett.ca

ONTARIO ASSOCIATION OF ARCHITECTS
WILLIAM P. LETT
LICENCE 5231

All dimensions to be checked and verified on site. Do not scale drawings. Any discrepancies are to be reported to the Consultant. All drawings remain the property of the Consultant. Only latest approved drawings to be used for construction.

CONSTRUCTION DOCUMENTATION

PROJECT No. 21-100
START DATE OCT.2021

City of Peterborough

FIRE STATION NO. 2

(Municipal File No. SPC 1009)
100 Marina Boulevard, Peterborough ON K9H 6M6

FIRST FLOOR PLAN

A-101

OUR PROCESS

Skyline Group Creates Drawing → Customer Reviews Measurements on Site → Measurements Correct → Customer Signs Drawing → Drawing Engineer Stamped → Product Fabricated & Shipped

Measurements Incorrect

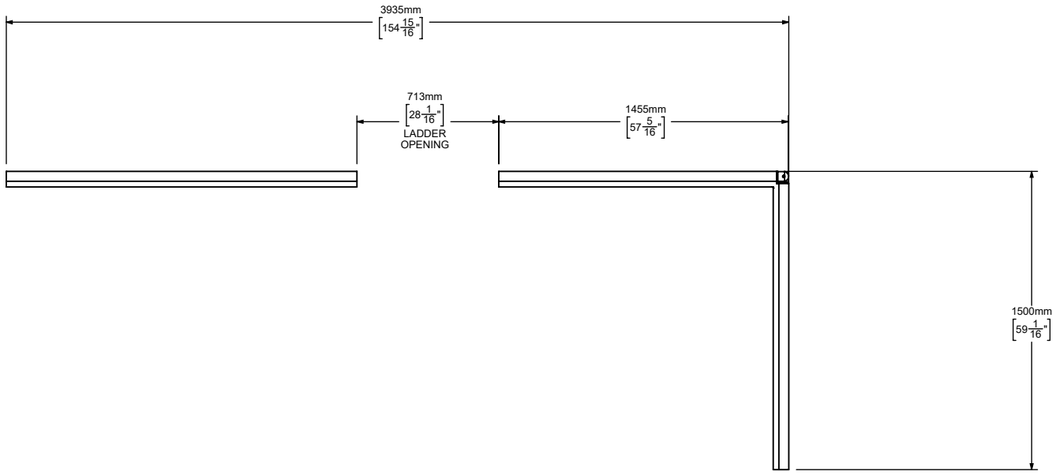

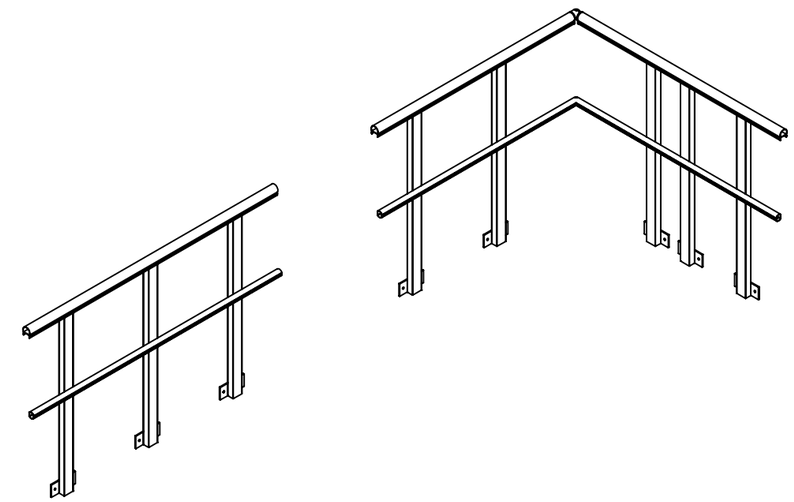

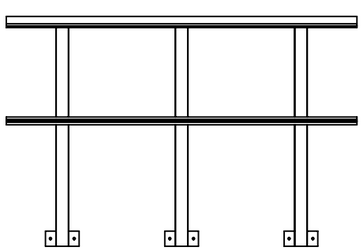

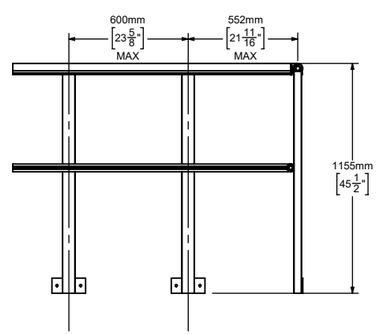

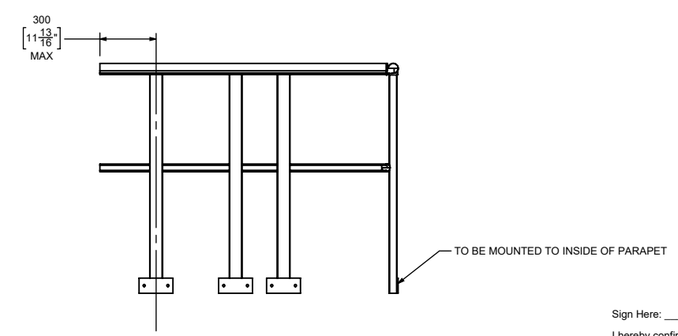

Sign Here: _____

I hereby confirm that all site conditions, design measurements, finishes and quantities have been checked and are correct as shown above.

NOTES:
1. REFER TO USERS MANUAL FOR INSTALLATION DETAILS
2. ENGINEER STAMP PROVIDED UPON CONFIRMATION AND APPROVAL OF CONFIGURATION, LAYOUT, AND DIMENSIONS
3. ANCHORING DETAILS BY OTHERS
4. AS-BUILT DRAWINGS WILL INCUR AN ADDITIONAL COST OF $1000.00 PER ORDER

SKYLINE GROUP

SUPPORT:
+1 877 417 6336
www.skylinegroupintl.com

PROPRIETARY AND CONFIDENTIAL

THE INFORMATION CONTAINED IN THIS DRAWING IS THE SOLE PROPERTY OF SKYLINE GROUP. ANY REPRODUCTION IN PART OR AS A WHOLE WITHOUT THE WRITTEN PERMISSION OF SKYLINE GROUP IS PROHIBITED. DIMENSIONS ARE IN MM, DO NOT SCALE DRAWING

CREATED BY	DATE CREATED
CF	2022/08/24

REV	DATE	INITIALS
1	2022/09/02	CF

PROJECT:	FIRE STATION #2 - CITY OF PETERBOROUGH		
PRODUCT:	SENTRY		
MATERIAL:	ALUMINUM	QTY:	1
FINISH:	STANDARD		
OPPORTUNITY #:	OP17831 QU18237		
DRAWING #:	OP17831 QU18237 - 1 OF 4		

OUR PROCESS

Skyline Group Creates Drawing → Customer Reviews Measurements on Site → Measurements Correct → Customer Signs Drawing → Drawing Engineer Stamped → Product Fabricated & Shipped

Measurements Incorrect

ISOMETRIC

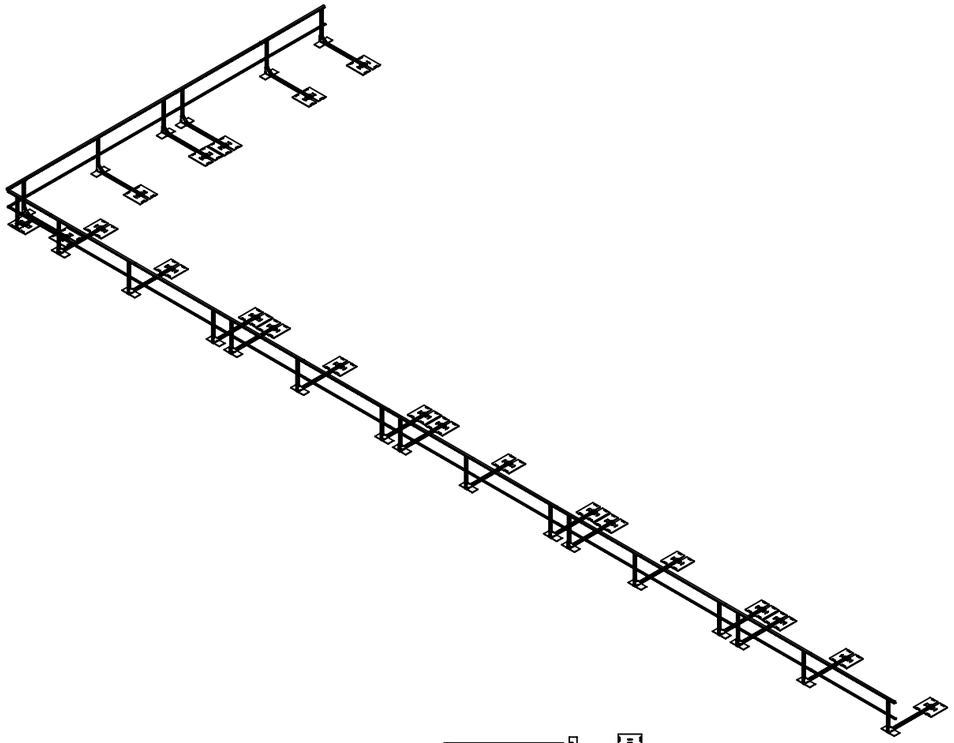

SIDE

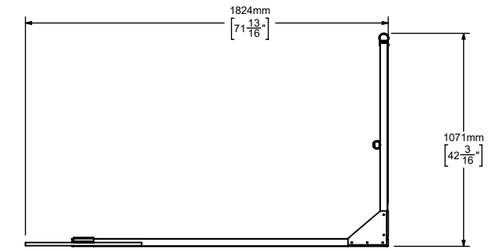

SECTION A-A

TOP

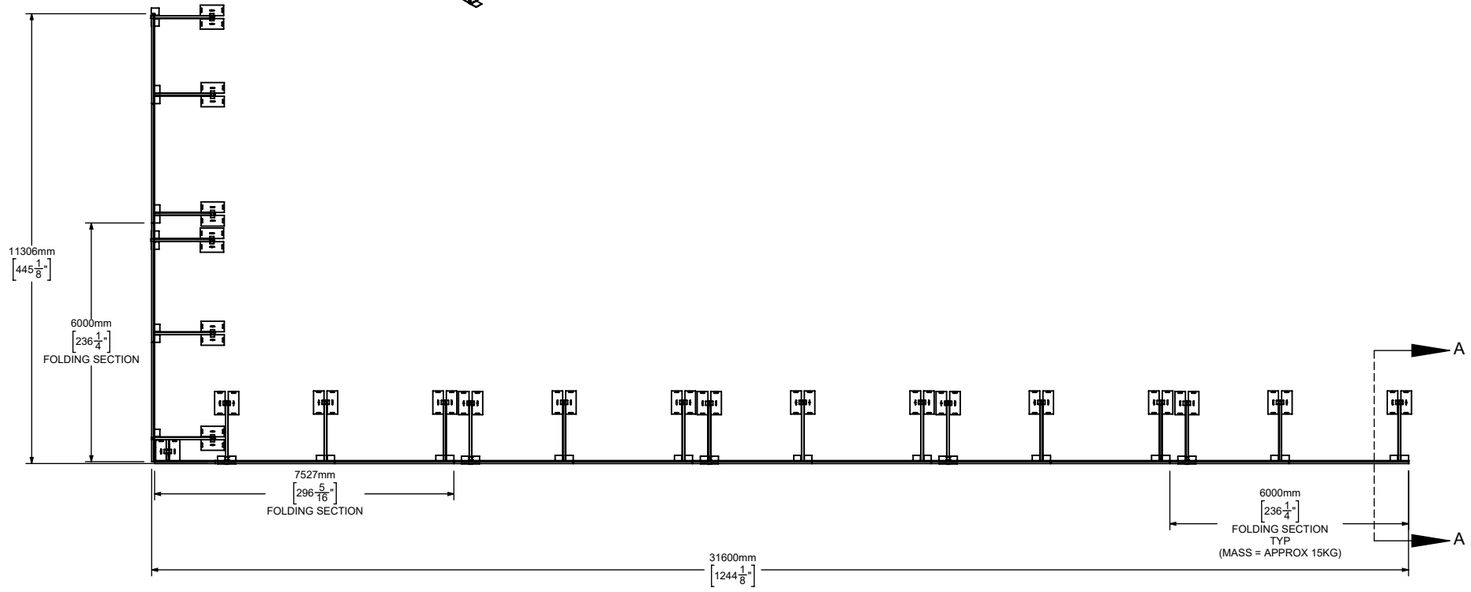

Sign Here: _____

I hereby confirm that all site conditions, design measurements, finishes and quantities have been checked and are correct as shown above.

NOTES:
1. BASEPLATES ARE GALVANIZED STEEL
2. BASEPLATES AND RUBBER MATS ARE 23" X 12"
3. HARDWARE PROVIDE TO COMPLETE SYSTEM
4. HANDRAILS AND KNEERAILS ARE PROVIDED 10' LONG AND ARE TO BE CUT ON SITE
5. SUBSTITUTIONS OF EQUAL OR GREATER RATING ARE ADMISSIBLE
6. COMPLIES WITH OCCUPATIONAL HEALTH AND SAFETY REGULATIONS
7. TO BE INSTALLED AS PER INSTALLATION MANUAL
8. INSTALLED ON ROOF WITH PARAPET ROOF EDGE UNLESS NOTED OTHERWISE
9. ENGINEER STAMP PROVIDED UPON CONFIRMATION AND APPROVAL OF CONFIGURATION, LAYOUT, AND DIMENSIONS
10. AS-BUILT DRAWINGS WILL INCUR AN ADDITIONAL COST OF $1000.00 PER ORDER

SKYLINE GROUP

SUPPORT:
+1 877 417 6336
www.skylinegroupintl.com

PROPRIETARY AND CONFIDENTIAL

THE INFORMATION CONTAINED IN THIS DRAWING IS THE SOLE PROPERTY OF SKYLINE GROUP. ANY REPRODUCTION IN PART OR AS A WHOLE WITHOUT THE WRITTEN PERMISSION OF SKYLINE GROUP IS PROHIBITED. DIMENSIONS ARE IN MM, DO NOT SCALE DRAWING

CREATED BY	DATE CREATED
CF	2022/08/24

REV	DATE	INITIALS
1	2022/09/02	CF

PROJECT:	FIRE STATION #2 - CITY OF PETERBOROUGH
PRODUCT:	5007 ROOFBARRIER
MATERIAL:	GALVANIZED STEEL — QTY: 1
FINISH:	STANDARD
OPPORTUNITY #:	OP17831 QU18237
DRAWING #:	OP17831 QU18237 - 2 OF 4

OUR PROCESS

Skyline Group Creates Drawing → Customer Reviews Measurements on Site → Measurements Correct → Customer Signs Drawing → Drawing Engineer Stamped → Product Fabricated & Shipped

Measurements Incorrect

ISOMETRIC

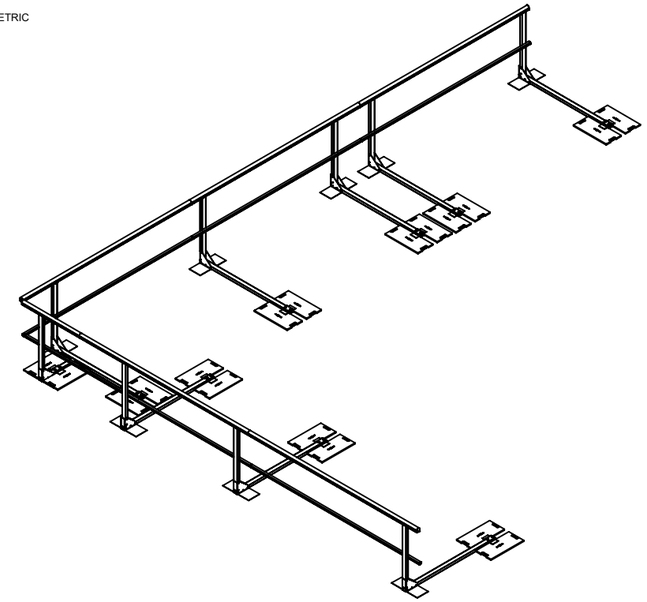

SIDE

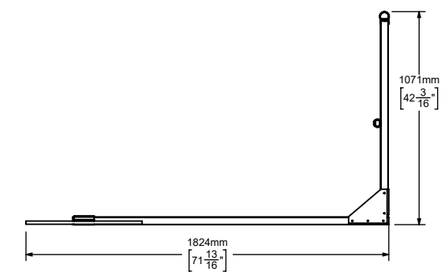

SECTION B-B

TOP

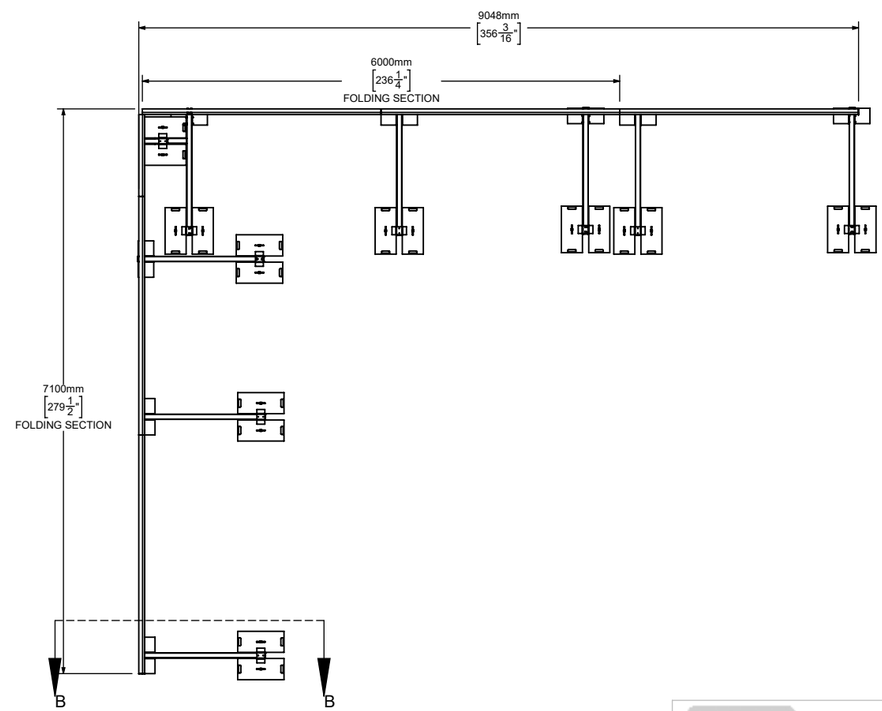

Sign Here: _____

I hereby confirm that all site conditions, design measurements, finishes and quantities have been checked and are correct as shown above.

NOTES:
1. BASEPLATES ARE GALVANIZED STEEL
2. BASEPLATES AND RUBBER MATS ARE 23" X 12"
3. HARDWARE PROVIDE TO COMPLETE SYSTEM
4. HANDRAILS AND KNEERAILS ARE PROVIDED 10' LONG AND ARE TO BE CUT ON SITE
5. SUBSTITUTIONS OF EQUAL OR GREATER RATING ARE ADMISSIBLE
6. COMPLIES WITH OCCUPATIONAL HEALTH AND SAFETY REGULATIONS
7. TO BE INSTALLED AS PER INSTALLATION MANUAL
8. INSTALLED ON ROOF WITH PARAPET ROOF EDGE UNLESS NOTED OTHERWISE
9. ENGINEER STAMP PROVIDED UPON CONFIRMATION AND APPROVAL OF CONFIGURATION, LAYOUT, AND DIMENSIONS
10. AS-BUILT DRAWINGS WILL INCUR AN ADDITIONAL COST OF $1000.00 PER ORDER

SKYLINE GROUP

SUPPORT:
+1 877 417 6336
www.skylinegroupintl.com

PROPRIETARY AND CONFIDENTIAL

THE INFORMATION CONTAINED IN THIS DRAWING IS THE SOLE PROPERTY OF SKYLINE GROUP. ANY REPRODUCTION IN PART OR AS A WHOLE WITHOUT THE WRITTEN PERMISSION OF SKYLINE GROUP IS PROHIBITED. DIMENSIONS ARE IN MM, DO NOT SCALE DRAWING

CREATED BY		DATE CREATED	PROJECT:	FIRE STATION #2 - CITY OF PETERBOROUGH	
CF		2022/08/24	PRODUCT:	5007 ROOFBARRIER	
REV	DATE	INITIALS	MATERIAL:	GALVANIZED STEEL	QTY: 1
1	2022/09/02	CF	FINISH:	STANDARD	
			OPPORTUNITY #:	OP17831 QU18237	
			DRAWING #:	OP17831 QU18237 - 3 OF 4	

OUR PROCESS

Skyline Group Creates Drawing → Customer Reviews Measurements on Site → Measurements Correct → Customer Signs Drawing → Drawing Engineer Stamped → Product Fabricated & Shipped

Measurements Incorrect

GUARDRAIL IN FOLDED POSITION

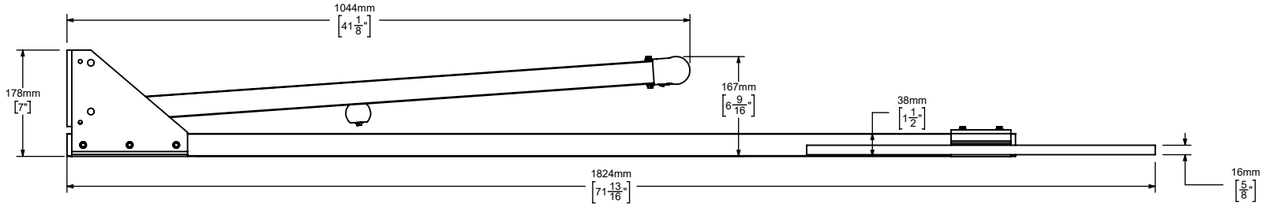

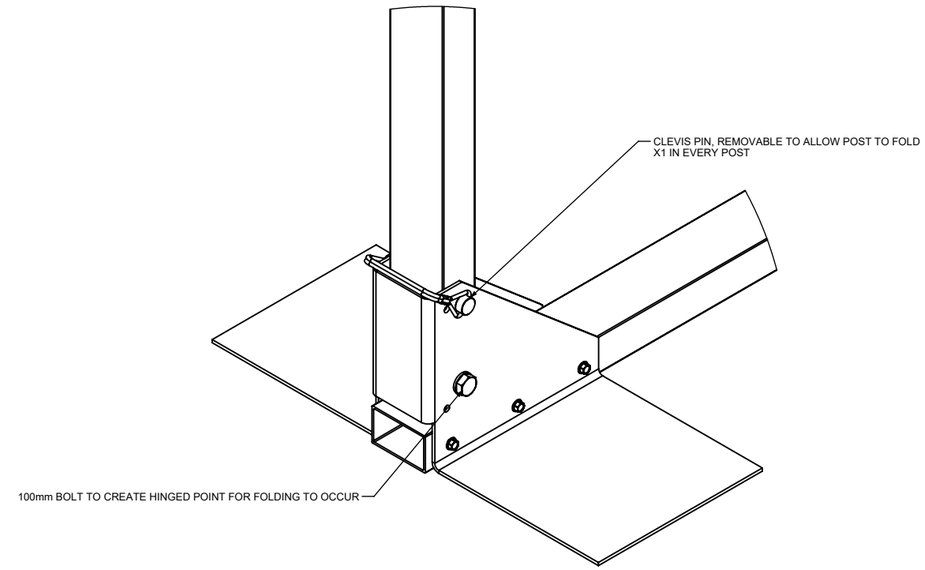

DETAIL D

GUARDRAIL SAMPLE IN UPRIGHT POSITION

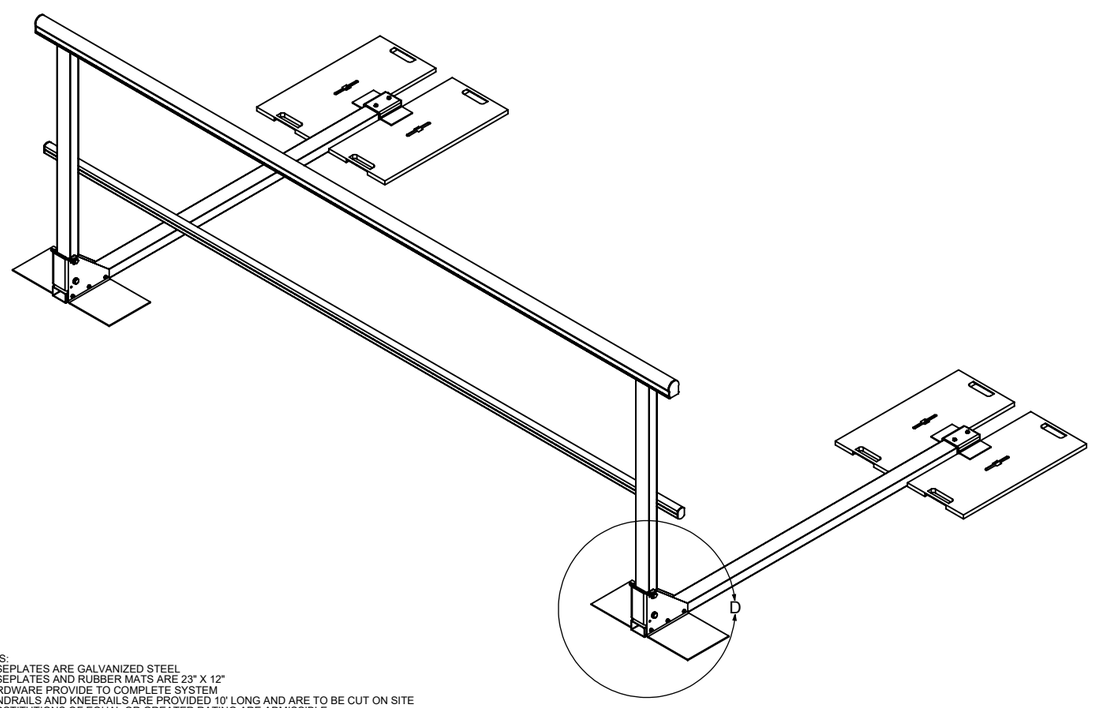

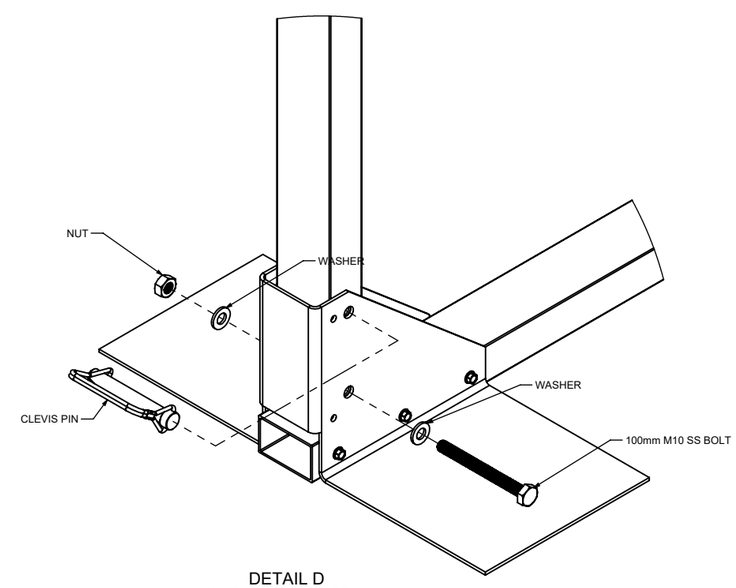

DETAIL D
IN EXPLODED VIEW

NOTES:
1. BASEPLATES ARE GALVANIZED STEEL
2. BASEPLATES AND RUBBER MATS ARE 23" X 12"
3. HARDWARE PROVIDE TO COMPLETE SYSTEM
4. HANDRAILS AND KNEERAILS ARE PROVIDED 10' LONG AND ARE TO BE CUT ON SITE
5. SUBSTITUTIONS OF EQUAL OR GREATER RATING ARE ADMISSIBLE
6. COMPLIES WITH OCCUPATIONAL HEALTH AND SAFETY REGULATIONS
7. TO BE INSTALLED AS PER INSTALLATION MANUAL
8. INSTALLED ON ROOF WITH PARAPET ROOF EDGE UNLESS NOTED OTHERWISE
9. ENGINEER STAMP PROVIDED UPON CONFIRMATION AND APPROVAL OF CONFIGURATION, LAYOUT, AND DIMENSIONS
10. AS-BUILT DRAWINGS WILL INCUR AN ADDITIONAL COST OF $1000.00 PER ORDER

Sign Here: _____

I hereby confirm that all site conditions, design measurements, finishes and quantities have been checked and are correct as shown above.

SKYLINE GROUP

SUPPORT:
+1 877 417 6336
www.skylinegroupintl.com

PROPRIETARY AND CONFIDENTIAL

THE INFORMATION CONTAINED IN THIS DRAWING IS THE SOLE PROPERTY OF SKYLINE GROUP. ANY REPRODUCTION IN PART OR AS A WHOLE WITHOUT THE WRITTEN PERMISSION OF SKYLINE GROUP IS PROHIBITED. DIMENSIONS ARE IN MM, DO NOT SCALE DRAWING

CREATED BY	DATE CREATED
CF	2022/08/24

REV	DATE	INITIALS
1	2022/09/02	CF

PROJECT:	FIRE STATION #2 - CITY OF PETERBOROUGH
PRODUCT:	5007 ROOFBARRIER
MATERIAL:	GALVANIZED STEEL — QTY: 1
FINISH:	STANDARD
OPPORTUNITY #:	OP17831 QU18237
DRAWING #:	OP17831 QU18237 - 4 OF 4